230V 1PH ____ A FUSED POWER SUPPLY
FROM A LOCAL ISOLATOR.

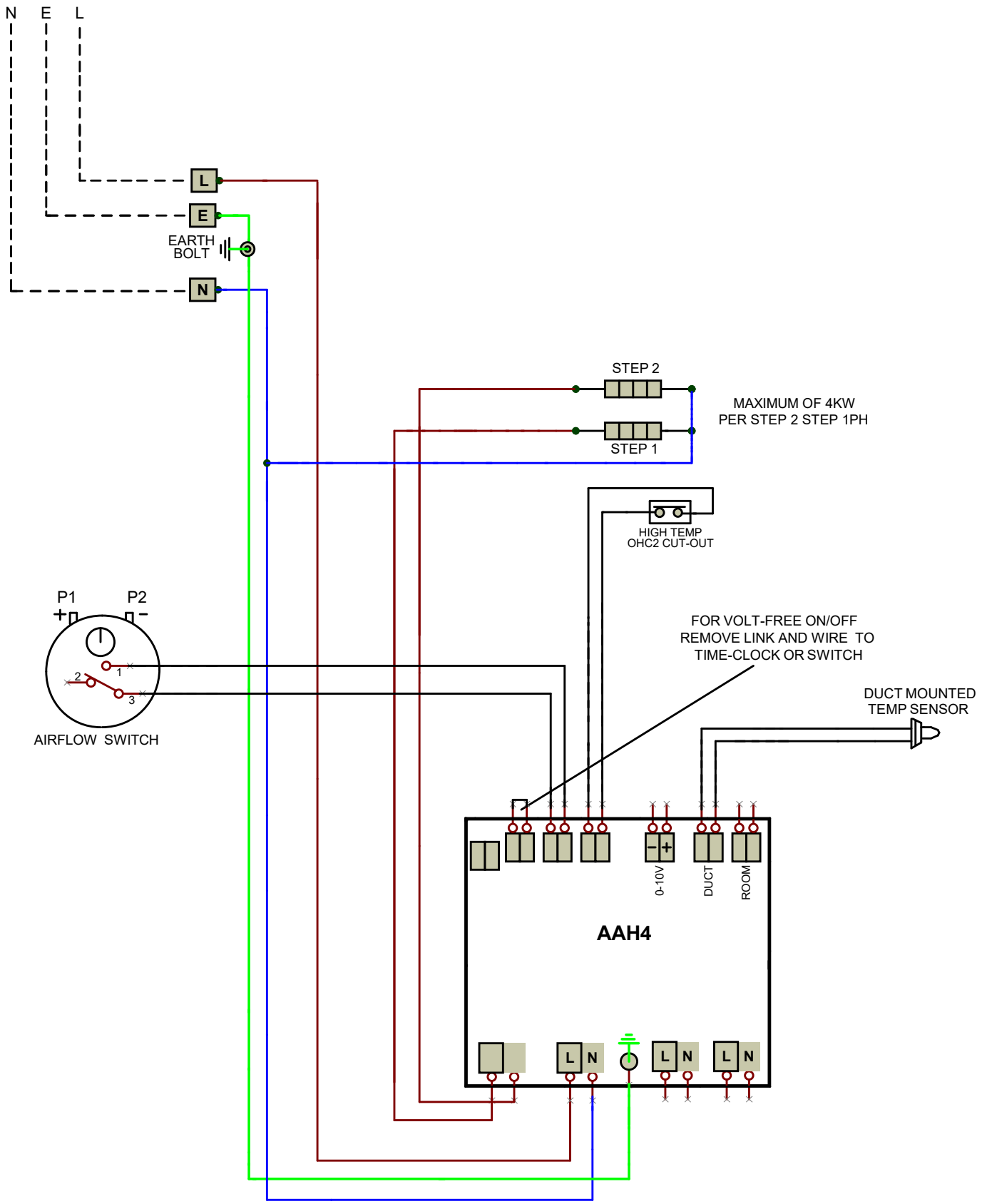

HEATING GROUP

AAH PRODUCTS

NEATAFAN

TITLE:	DATE:
AAH4 2 STEP 1PH HEATERWIRING.	02/02/26
BY: NFE REV:	PAGE: 1/1