Unit 12 Solent Industrial Estate, Shamblehurst Lane
Hedge End, Southampton, SO30 2FX

Tel: 01489 783783

Email: info@aahproducts.com
Email: sales@neatafan.co.uk
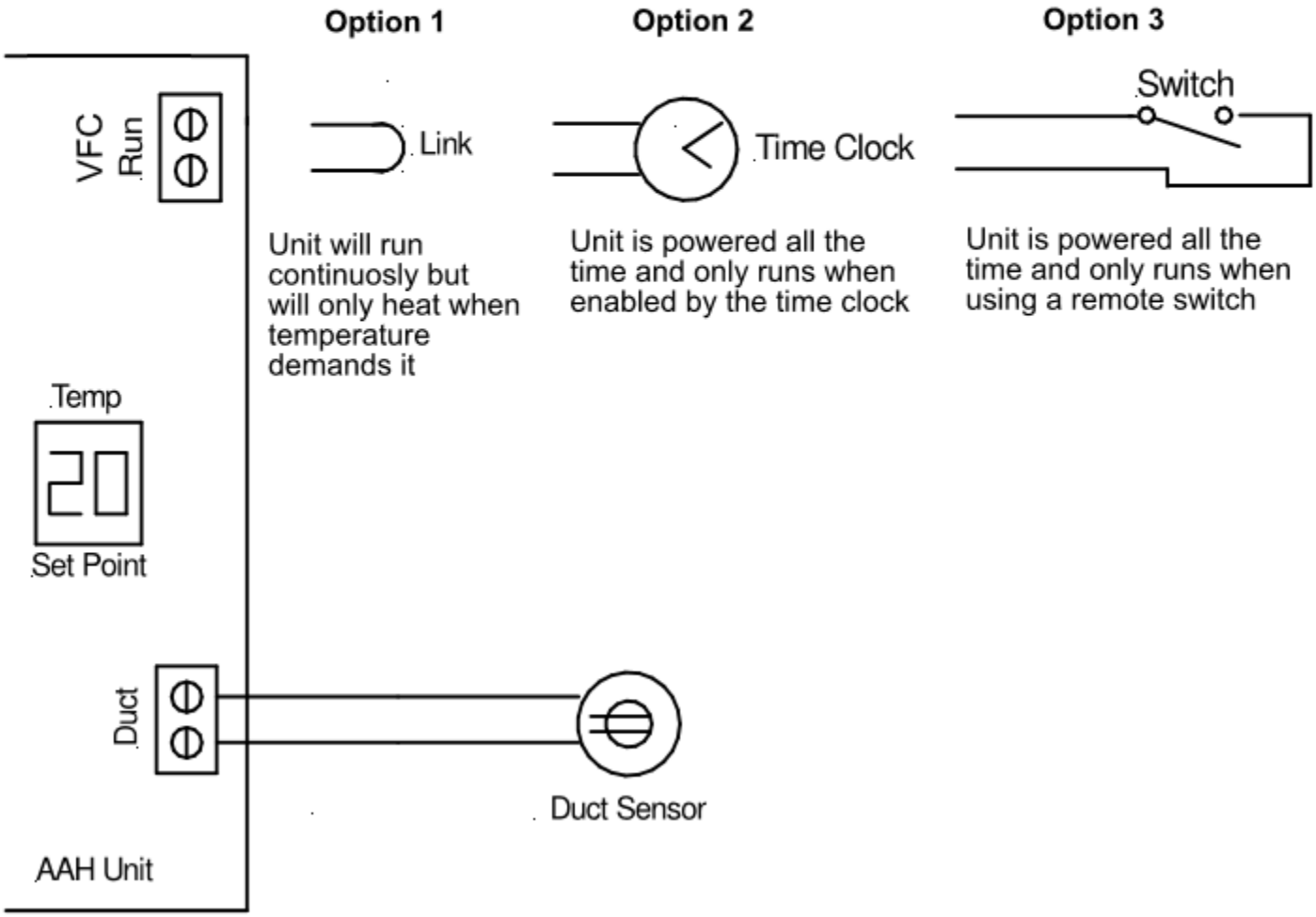
Set Point with Duct Temp